Palift PALAZZANI XTJ 170+ SPIDER LIFT

BI-ENERGY

Diesel
32,5 kW

Single-phase
Electric motor
110VAC - 2,2 kW

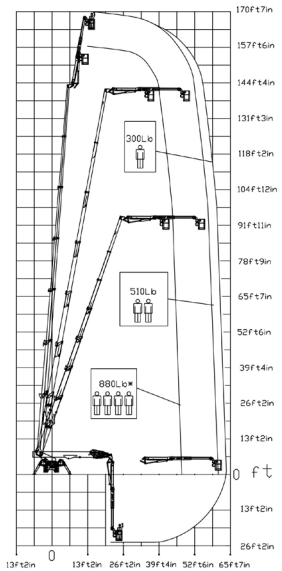

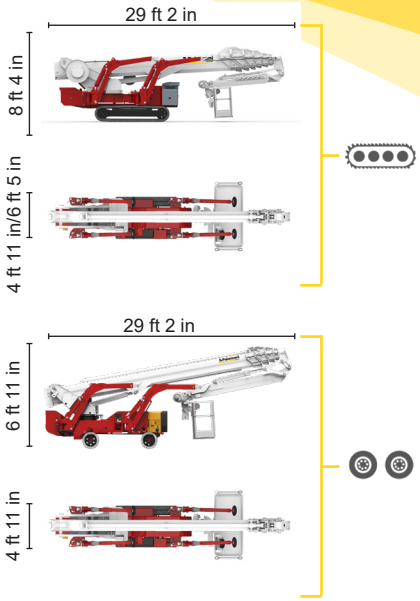

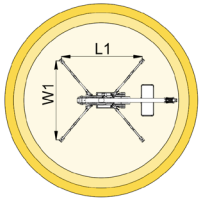

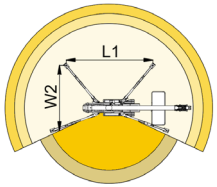

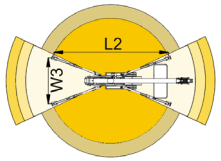

47 ft 7 in	60 ft 8 in	63 ft 12 in	41 ft	54 ft 2 in	L1	L2	W1	W2	W3
880 lb*	510 lb	264 lb	880 lb*	264/510 lb	21 ft 2 in	23 ft 7 in	16 ft 12 in	15 ft 3 in	13 ft 7 in

XTJ 170+/C		170 ft 7 in	63 ft 1 in	880 lb*	660°	7 ft 10 in x 2 ft 4 in	90°+80°	13 ft 7in/16 ft 12in	16%	42%	1,2 mph	33025 lb	21357 lb	93,8 psf	146,4 psf
XTJ 170+/W		170 ft 7 in	63 ft 1 in	880 lb*	660°	7 ft 10 in x 2 ft 4 in	90°+80°	13 ft 7iin/16 ft 12in	16%	21%	0,7 mph	28660 lb	21357 lb	81,2 psf	159,6 psf

Available power options:

BI-ENERGY (DIESEL+AC)

Characteristics and technical data are informative only and subjected to change without notice.

SOSEQUIPMENT
760 rue Bériault, Longueuil, Québec (Canada) J4G 1R8
1-833-360-3330 | info@sosequipment.ca

Palazzani Industrie S.p.A.
Via del Pavione, 4 - 25050 - Paderno F.C. (BS) - Italy
Tel. (+39) 0306857073
info@palazzani.it
www.palazzani.it

Palazzani INDUSTRIE

QUALITY SYSTEM
CERTIFIED BY BUREAU VERITAS
= ISO 9001=

NC 848 A 22